Compact and Bright

Multiple Inputs

Brilliant images

BOXLIGHT

CP-630i

For presentations on the road, this **LIGHTWEIGHT** machine has the features and power that you've been looking for. The CP-630i is powered with **1600 ANSI LUMENS** of brilliance, to let you run your presentation in virtually any lighting condition. Its true **800 X 600 SVGA** resolution is instantly compatible with most laptops. You can even **CONNECT MULTIPLE COMPUTERS** and a peripheral system simultaneously, to go from one presenter to the next. At only 7.2 pounds it's **EXTREMELY PORTABLE**, and set-up is easy with its manual zoom/focus. And with features like **DIGITAL ZOOM**, digital keystone correction and a wireless remote control, your presentations will always be polished.

Call the digital projector specialists at **BOXLIGHT**.

19332 Powder Hill Place
Poulsbo, Washington 98370
800.762.5757
360.779.7901
www.boxlight.com

BOXLIGHT®
Presenting a Better Way

BOXLIGHT and the BOXLIGHT logo are registered trademarks of BOXLIGHT Corporation. © Copyright BOXLIGHT Corporation, 2000.
All other marks are the property of their respective owners. Specifications subject to change without notice. M1-CP-630iUS-08/01

B O X L I G H T

CP-630i

p r o j e c t o r

- *Brilliant 1600 ANSI lumens delivers astounding images even in well-lit rooms.*
- *Weighing only 7.2 lbs/3.25 kg, you can pack it with your laptop for easy traveling.*
- *Digital keystone correction allows a square image to be projected in any environment.*
- *Multiple inputs contribute to ease of use and help presentations with multiple media sources run smoothly.*
- *All BOXLIGHT projectors feature the latest in technology and design. Lifetime 24/7 technical support and the fastest response time in the industry from our state-of-the-art service center are included for your convenience.*

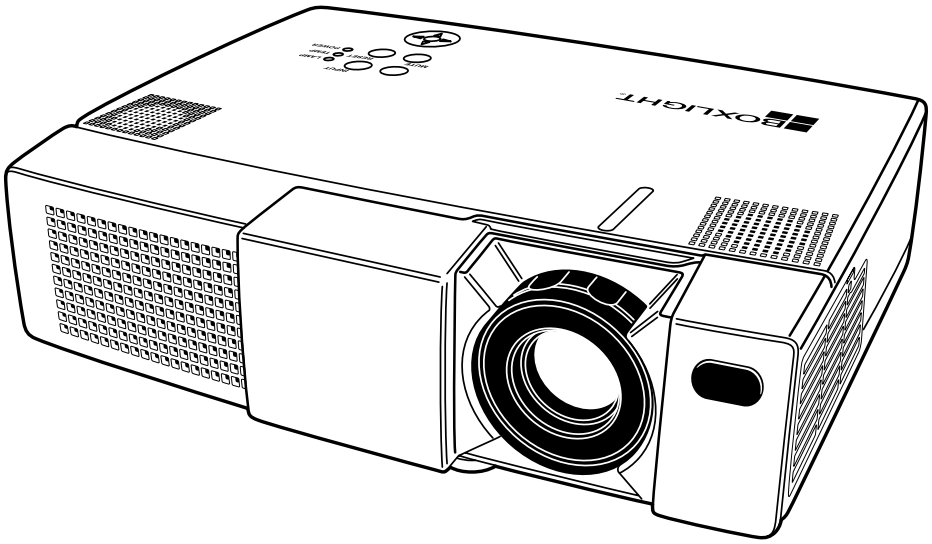

BOXLIGHT®
Presenting a Better Way

To contact BOXLIGHT

Direct	800.762.5757
Rental	800.736.6954
Education	800.689.6676
Government	800.497.4009
International	360.779.7901
Toll Free Fax	888.353.4242
Internet	www.boxlight.com

AMERICAN EXPRESS® Business Finance

Resolution	800 x 600 true SVGA and compression up to 1280 x 1024 SXGA	Video	NTSC, NTSC 4.43, PAL, PAL-M, PAL-N, PAL-60, SECAM
Brightness	1600 ANSI lumens	Weight	7.2 lbs/3.25 kg
Lamp	160 watt, UHB	Dimensions	11.7"/29.8 cm (W) x 3.7"/9.5 cm (H) x 9"/22.8 cm (D)
Lamp Life	2000 hours	Projection Lens	Manual 1:1.2 zoom ratio, F1.7-2.0 (f=37.5-45.1mm)
Display Type	(3) 0.9"/2.3 cm TFT polysilicon LCDs with micro lens	Diagonal Image Size	30"-300"/76.2-762 cm
Contrast Ratio	300:1	Throw Distance	3.9'-41.0'/1.2-12.5 m
Colors	16.7 million	Keystone	Digital adjustment of +/- 15%
Aspect Ratio	4:3, 16:9 compatible	Adjustments	On-board and a remote
Inputs	Computer: (2) 15 pin	Power Supply	100-120V AC/220-240V at 50/60Hz
	Video: (1) composite, (1) S-video	Power Consumption	250 Watts
	Audio: (2) computer mini-jack, (1) L/R RCA.	Compatibility	SXGA, XGA, SVGA, VGA, Mac
Outputs	Computer: (1) 15 pin monitor loop through; Audio: (1) mini-jack;	Warranty	Two-year parts and labor (120-day lamp guarantee)
	Control port: (1) control port for remote mouse control,	Accessories Included	Remote control, power cord, VGA cable, PS/2 mouse cable, RCA video
	(1) USB control port for remote mouse control		cables, soft case
Audible Noise	37 dB	Optional Accessories	Serial mouse cable, Mac mouse cable, Mac adapter, S-video cable, ceiling
Audio	(2) built-in 1 watt speakers		mount plate, ceiling mount suspension pole, various cases